YARD FORCE

Quick Start for Robotic mower

Compact 280R

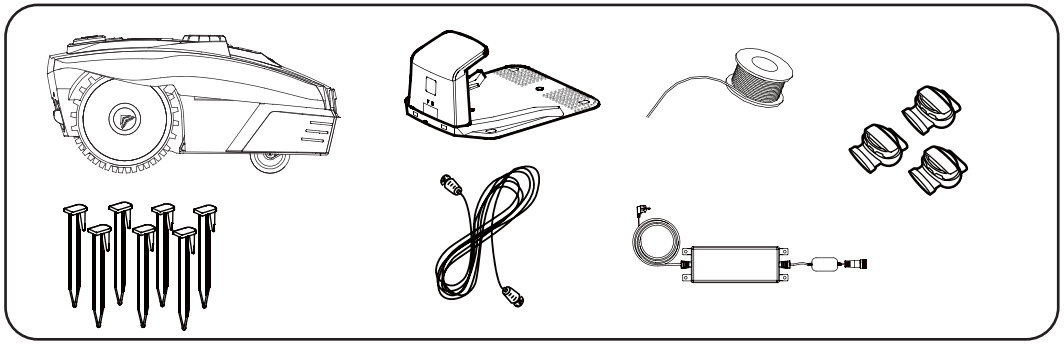

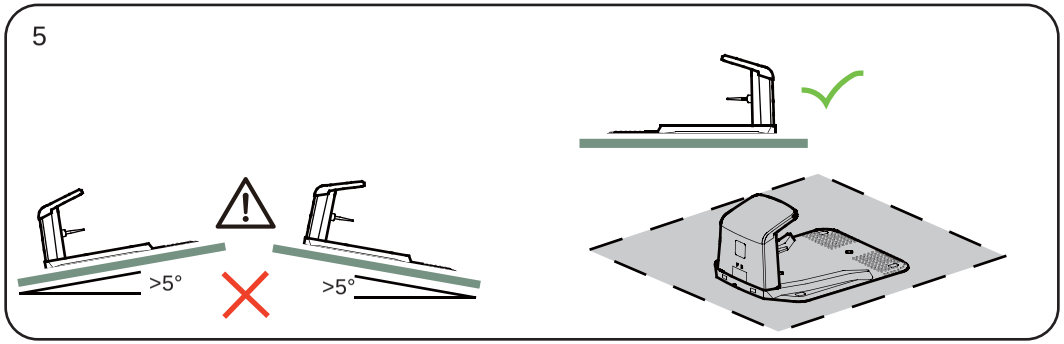

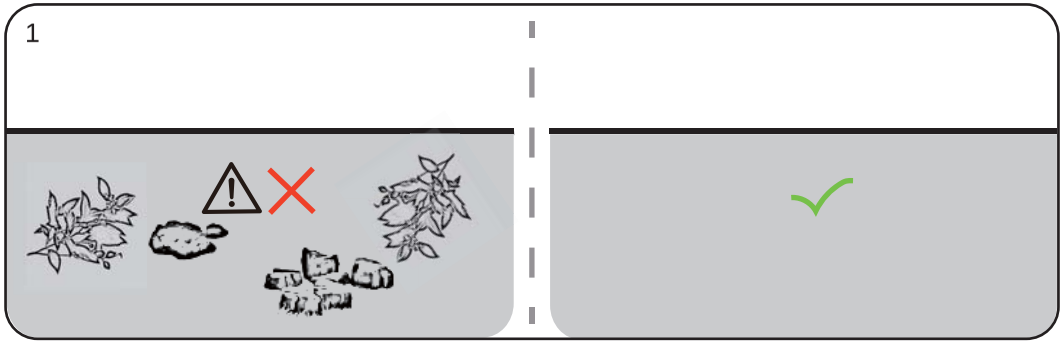

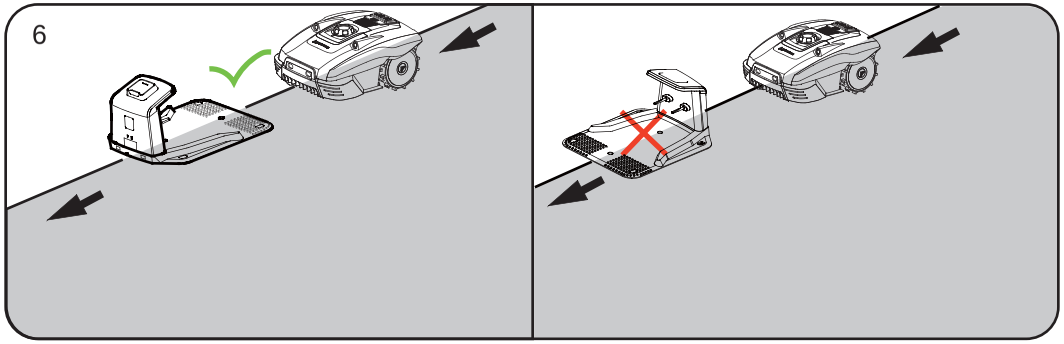

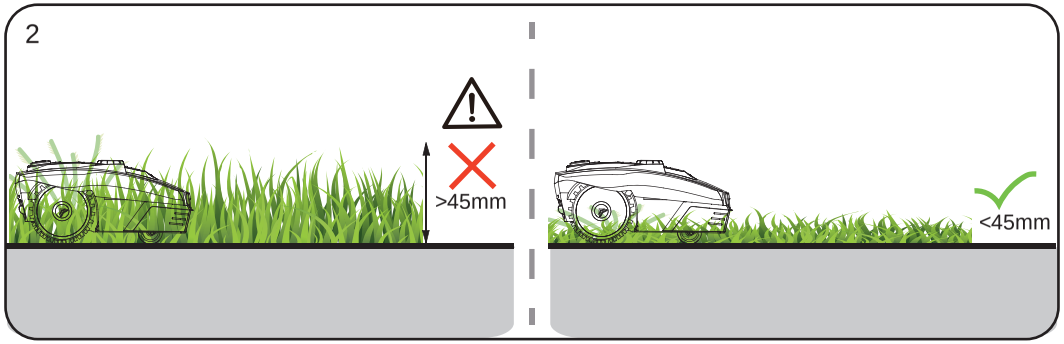

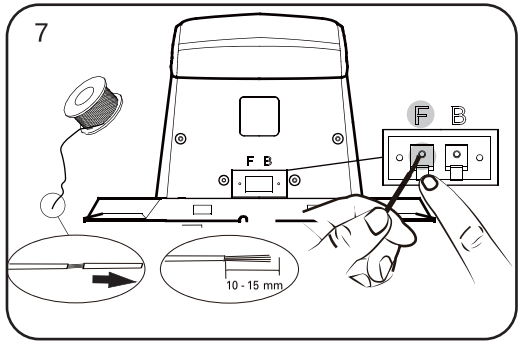

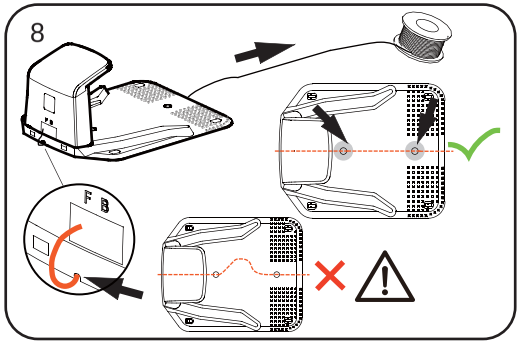

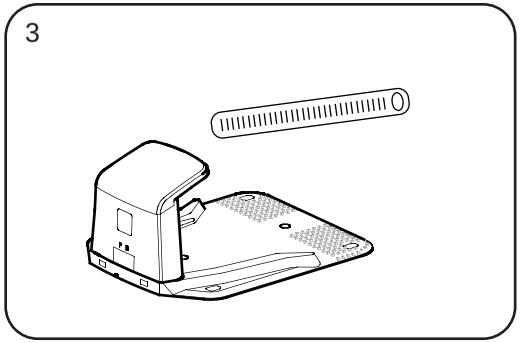

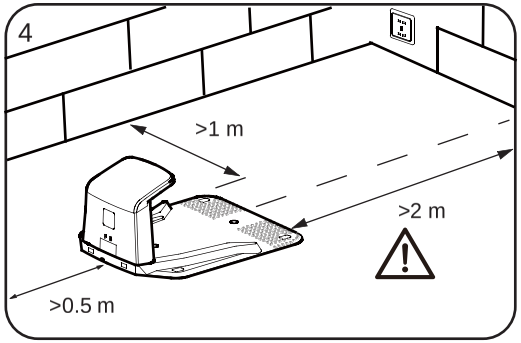

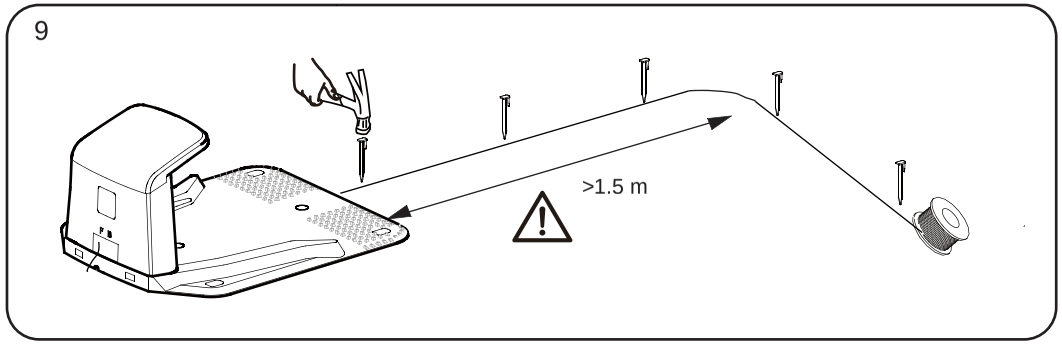

10

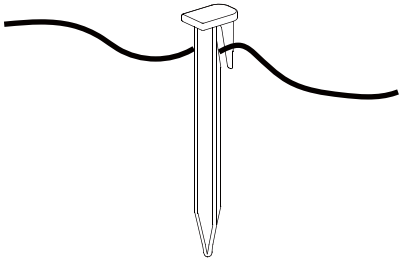

11

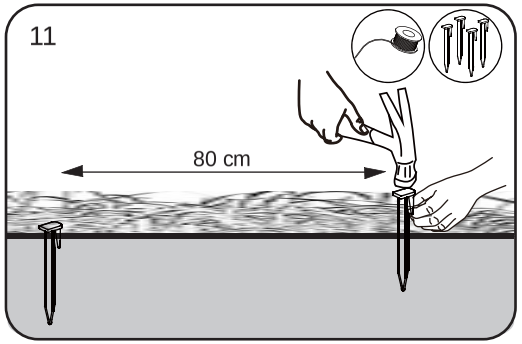

12

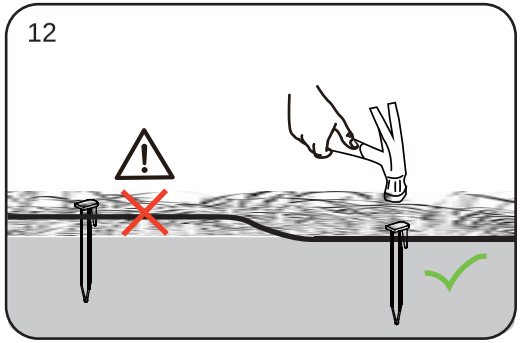

13

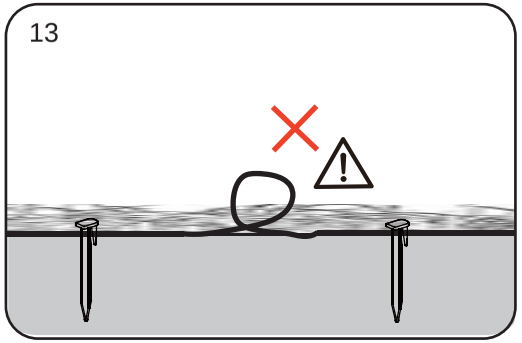

14

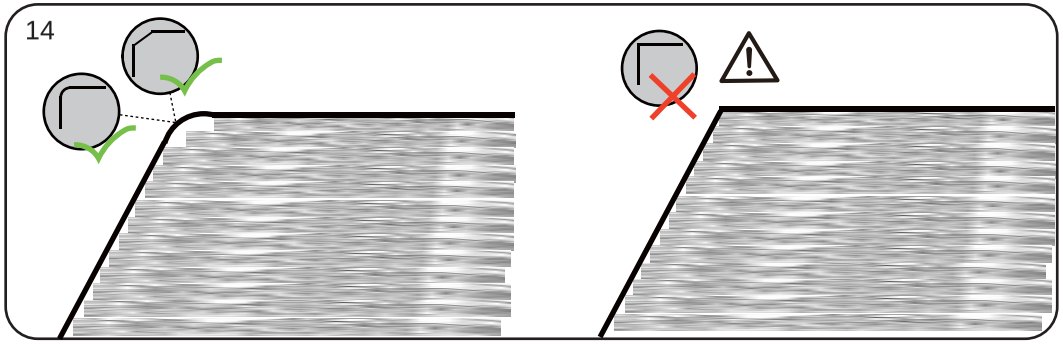

15

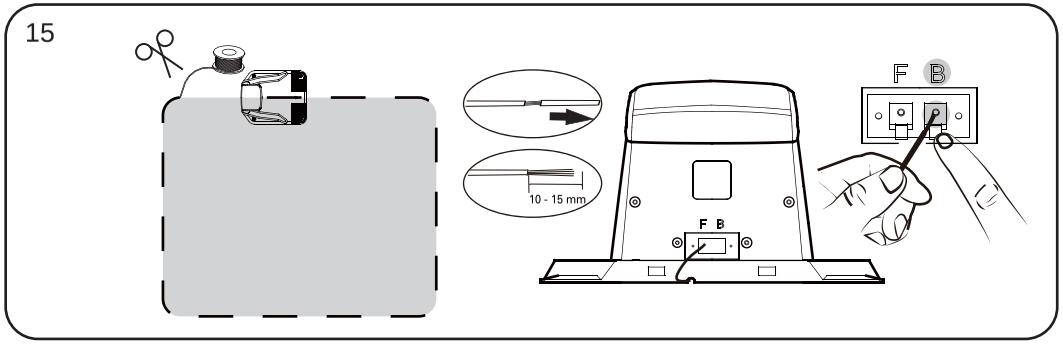

16

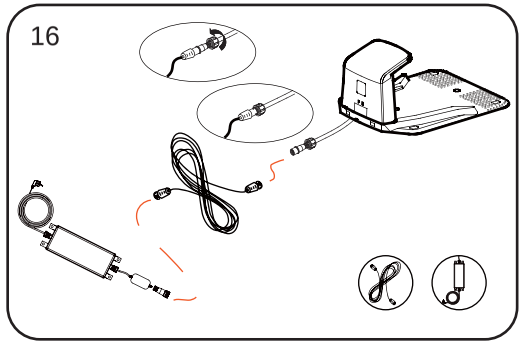

17

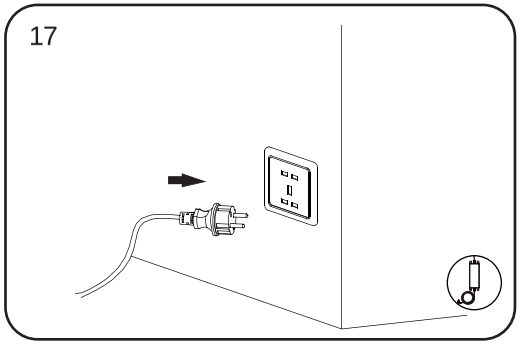

18

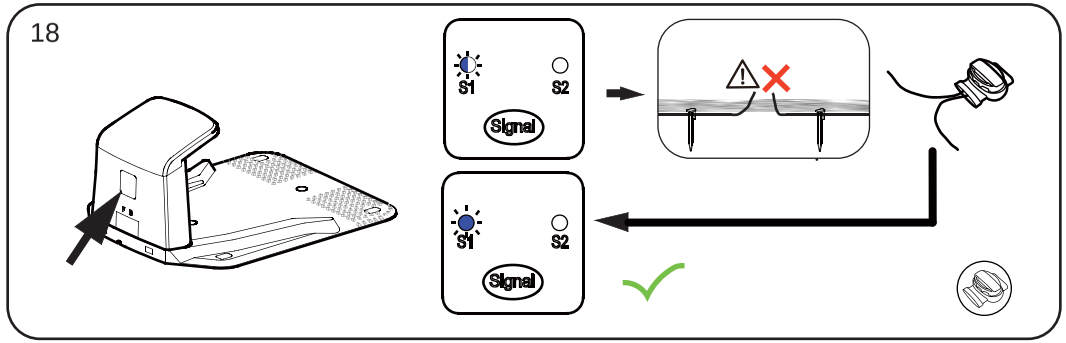

19

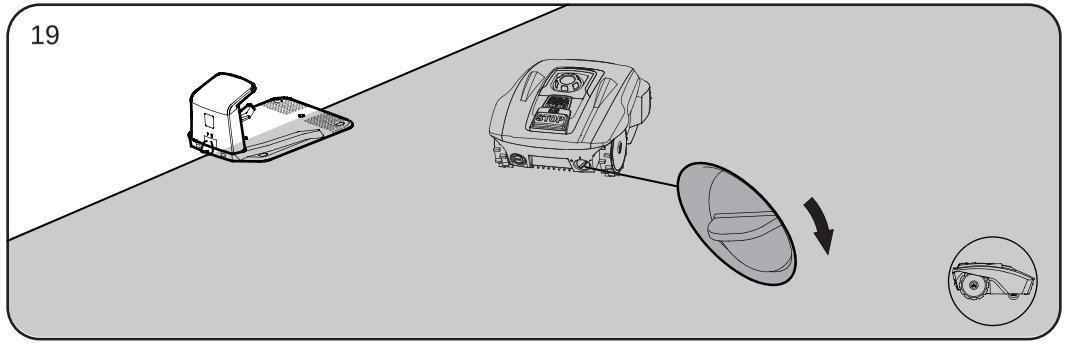

20

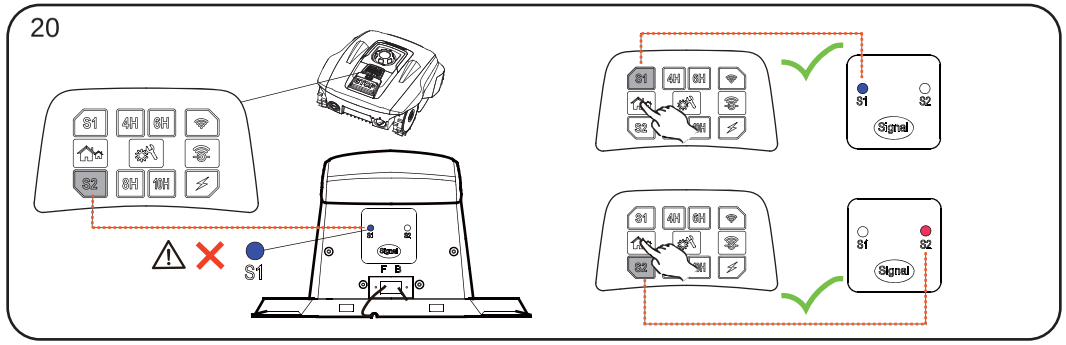

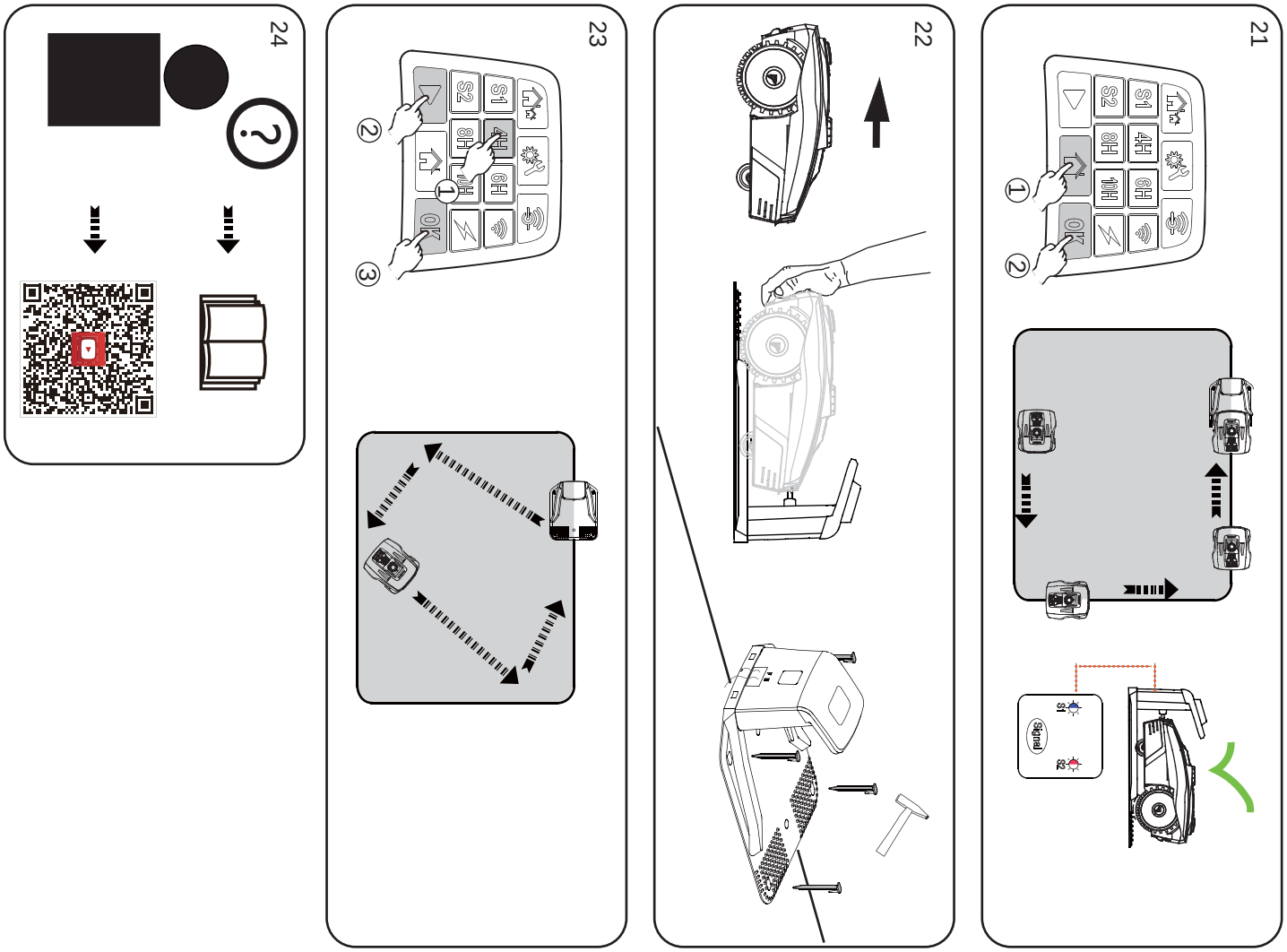
21
S1
S2
4H
8H
6H
10H
OK
Signal
22
23
24

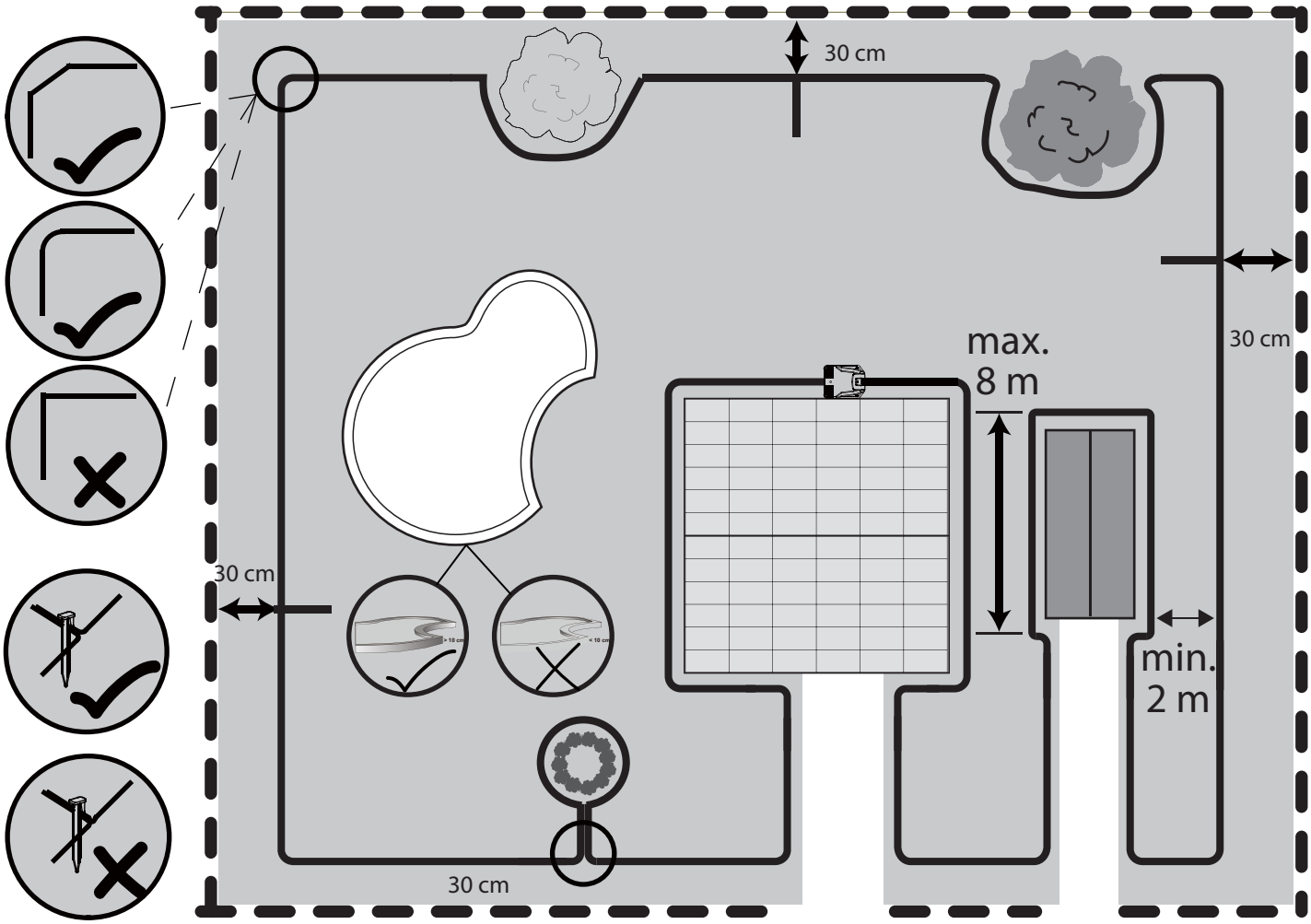
30 cm
30 cm
max.
8 m
30 cm
min.
2 m
30 cm